BET (ELE 1071) - Midterm Exam – September 2025
Answer Scheme

Q. No	Question & Answer scheme	Marks
1	The node voltages marked as V_1 and V_2 , for the circuit shown, are 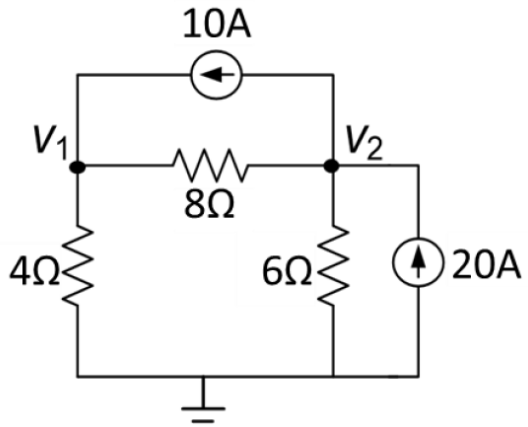 a) V_1 = 53.33V and V_2 = -44.44V b) V_1 = 44.44V and V_2 = 53.33V c) V_1 = 44.44V and V_2 = 63.33V d) (D) V_1 = 63.33V and V_2 = -44.44V	1M
2	For the circuit shown, the switch was at position 1 for a very long time and then switched to position 2 at t=0. The time constant of the circuit is ____ seconds and the current through the inductor at 8ms is _____ A. 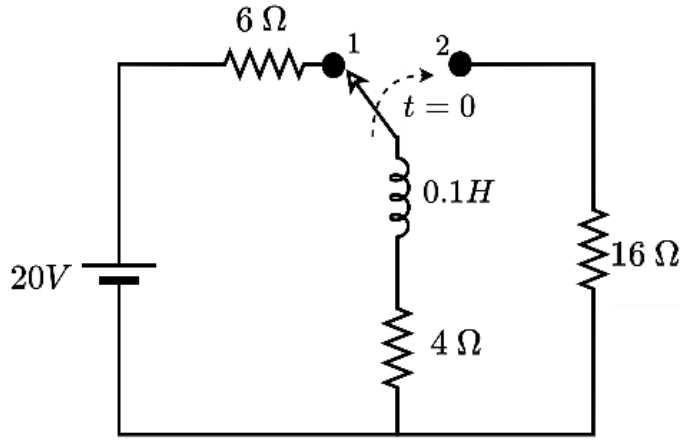 a) 10ms, 0.8986 A b) 10ms, 0.4037 A c) 5ms, 0.4037 A d) 5ms, 0.8986 A	1M

BET (ELE 1071) - Midterm Exam – September 2025
Answer Scheme

3	The RMS value for the waveform shown below is ____ V. 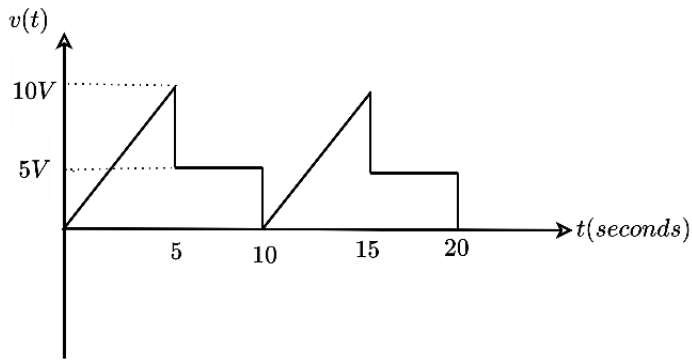 a) 5 b) 5.4 c) 29.16 d) 7.63	1M
4	In a single-phase AC circuit, the supply voltage is given by $v(t) = 565.685\ sin(100\pi t)\ V$ and the current drawn by the circuit is $i(t) = 28.284\ cos(100\pi t - 30)A$. The impedance of the circuit is_____. a) (10 – j17.32) Ω b) (10 + j17.32) Ω c) (17.32 – j10) Ω d) (17.32 + j10) Ω	1M
5	For the circuit shown, the current drawn from the source is (8+j6)A. The circuit elements of the impedance Z_1 are _____ . 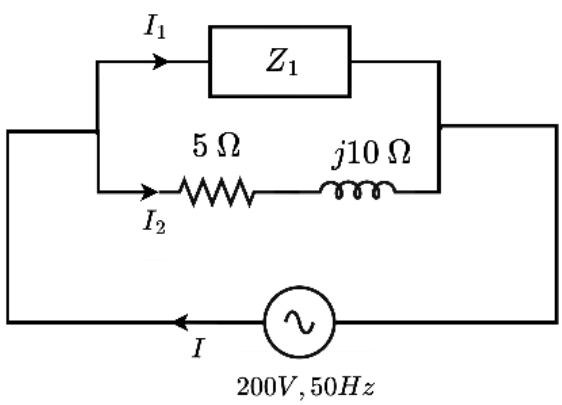 a) 9.09 Ω b) 0.35 mF c) 28.9 mH d) 9.09 mF	1M

6	For the circuit shown in the figure, determine the equivalent resistance across terminals a and b. Hence, find the power supplied by the 150V voltage source. 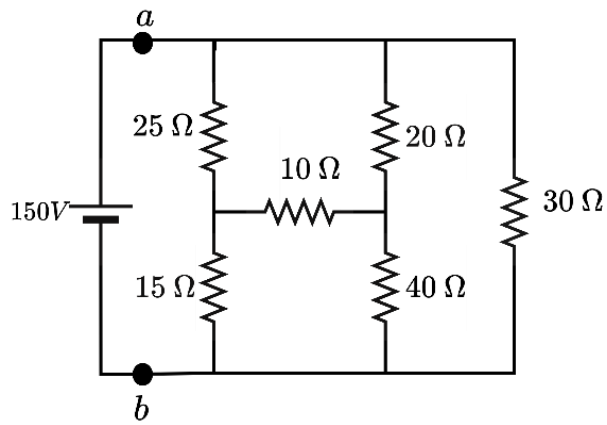 ***Step 01: Convert any star to delta / delta to star*** 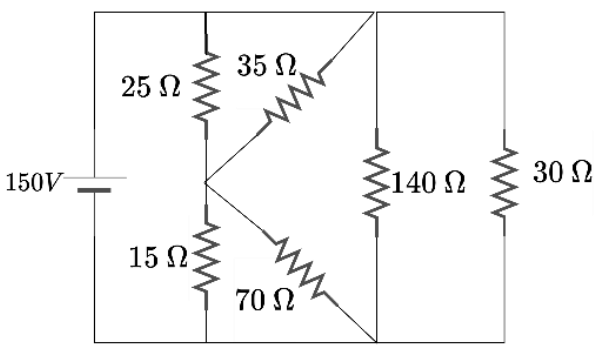 -----	2M
	Step 02: Simplifying the network to find **R_{eq} = 12.88Ω** -----	2M
	Step 03: Power supplied by 150V source **P = (150²/12.88) = 1746W** -----	1M
7	Determine the power consumed by the **10 Ω** resistor in the given network using mesh current analysis. 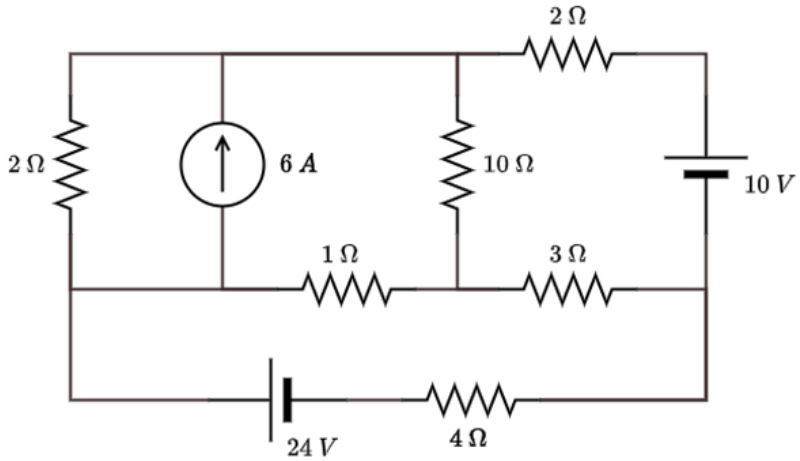 	

Step 1: Reduce the circuit and write the mesh current equations

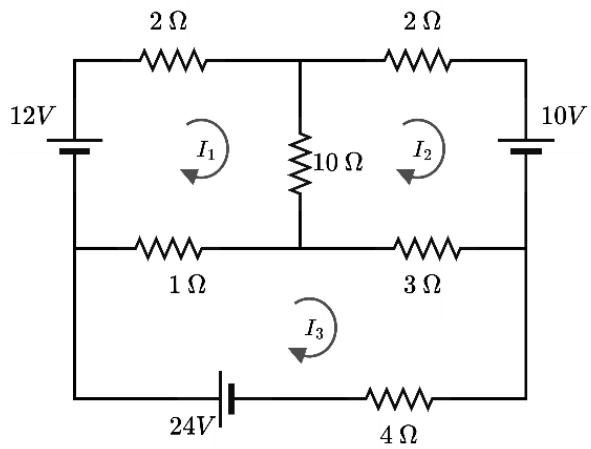

$13I_1 - 10I_2 - I_3 = 12$ --- (i)
$-10I_1 + 15I_2 - 3I_3 = -10$ --- (ii)
$-I_1 - 3I_2 + 8I_3 = 24$ --- (iii) (each equation 1M) ----- 3M

Step 3: Solving equations, we get
$I_1 = 2.78A$
$I_2 = 2.01A$
$I_3 = 4.10A$ ----- 1M

Step 4: The power consumed by 10Ω resistor
$P_{10\Omega} = (I_1 - I_2)^2 * 10 = 5.93W$ ----- 1M

8. Determine the maximum power that could be consumed by the load resistor R_L shown in the circuit given.

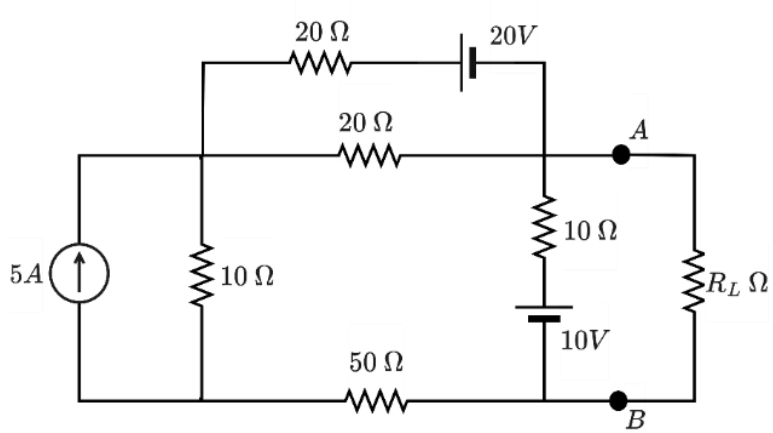

Step1 : To find V_{th}
(*Solution is prepared using mesh current. Student may use other method to find Vth.*)

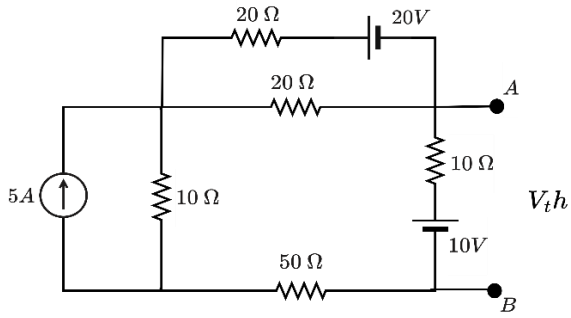

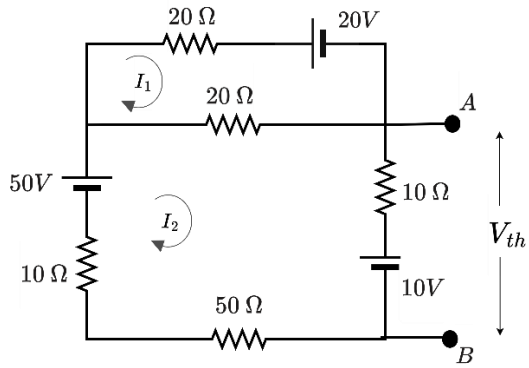

I_1 = -0.3125A and I_2 = 0.375A

V_{ab} = **V_{th}** = 10 + (0.375)(10) = **13.75V** ----- 2M

Step2: To find R_{th}

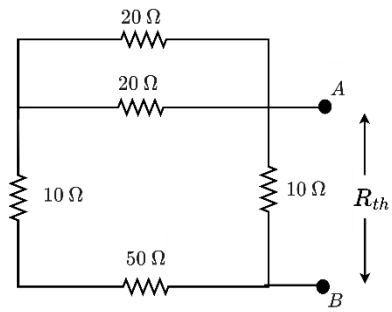

((20Ω||20Ω)+(10Ω+50Ω))||(10Ω) **R_{th} = 8.75Ω** ----- 2M

Step 3: To find P_{max}

$P_{max} = \frac{V_{th}^2}{4R_{th}}$ = **5.40W** ----- 1M

9. A coil with resistance and inductance as R_{coil} and L_{coil}, is connected in series with a resistor of 40 Ω, a capacitor of 150 μF, and a 200V, 50 Hz single-phase supply as shown in the figure. If the voltage source supplies a current of 2A in-phase with the source, find the coil parameters as well as the total active and reactive power.

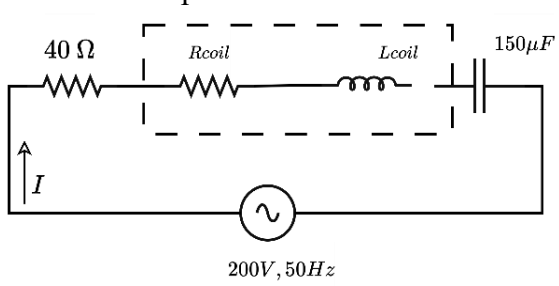

Step1: To find coil parameters

As I = 2A is in phase with V, $V_{Lcoil} = V_C$. So, $X_L = X_C$.

$X_L = X_C = \frac{1}{2\pi(50)(150\mu)} = 21.22\Omega$

L_{coil} = $\frac{X_L}{100\pi} = 67.5mH$ ----- 2M

$V_{40\Omega} = 2 * 40 = 80V$.
Hence, $V_{Rcoil} = 200 – 80 = 120V$
R_{coil} = 120/2 = 60Ω ----- 1M

Step 2: To find Active & Reactive Powers

Active Power P = $2^2 * (40+60)$ = **400W**
Or P = 200 * 2 * cos(0) = 400W ----- 1M

Reactive Power Q = 200 * 2 * sin(0) = **0 VAr** ----- 1M

10 A single-phase 230V, 50 Hz source is connected to the following loads, connected in parallel.

a) 2000W, 0.707 lag
b) 1500 Var, 0.6 lag

Find the total current drawn by the loads. Also, determine the value of the capacitance to be connected across the loads, to improve the power factor to 0.95 lagging.

Step 1: Find the power components of loads L_1 and L_2

Load	Active Power P (W)	Reactive Power Q (VAr)	Power Factor cosØ	Phase Angle (Ø)
L_1	2000	**2000**	0.707 lag	**45°**
L_2	**1125**	1500	0.6 lag	**53.13°**

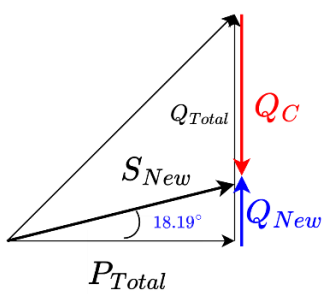

(Not necessary to draw power triangle)

P_{total} = 2000 + 1125 = **3125W** Q_{total} = 2000 + 1500 = **3500 Var**. ----- 2M

Step 2: To find the Total Current

Total Current = conjugate $\left(\frac{3125+j3500}{230}\right)$ = **20.40 ∠-48.24° A**. ----- 1M

Step 3: To find the Capacitance to be connected to improve pf to 0.95 lagging

$Q_N = 3125 * \tan(\cos^{-1}(0.95))$ = **1027 VAr.**
So, Capacitive reactance required Q_C = 3500 – 1027 = **2472 VAr**. ----- 1M

$X_C = \frac{230^2}{2472} = 21.39\ \Omega$

Therefore, value of **C = 148.8μF.** ----- 1M